17587

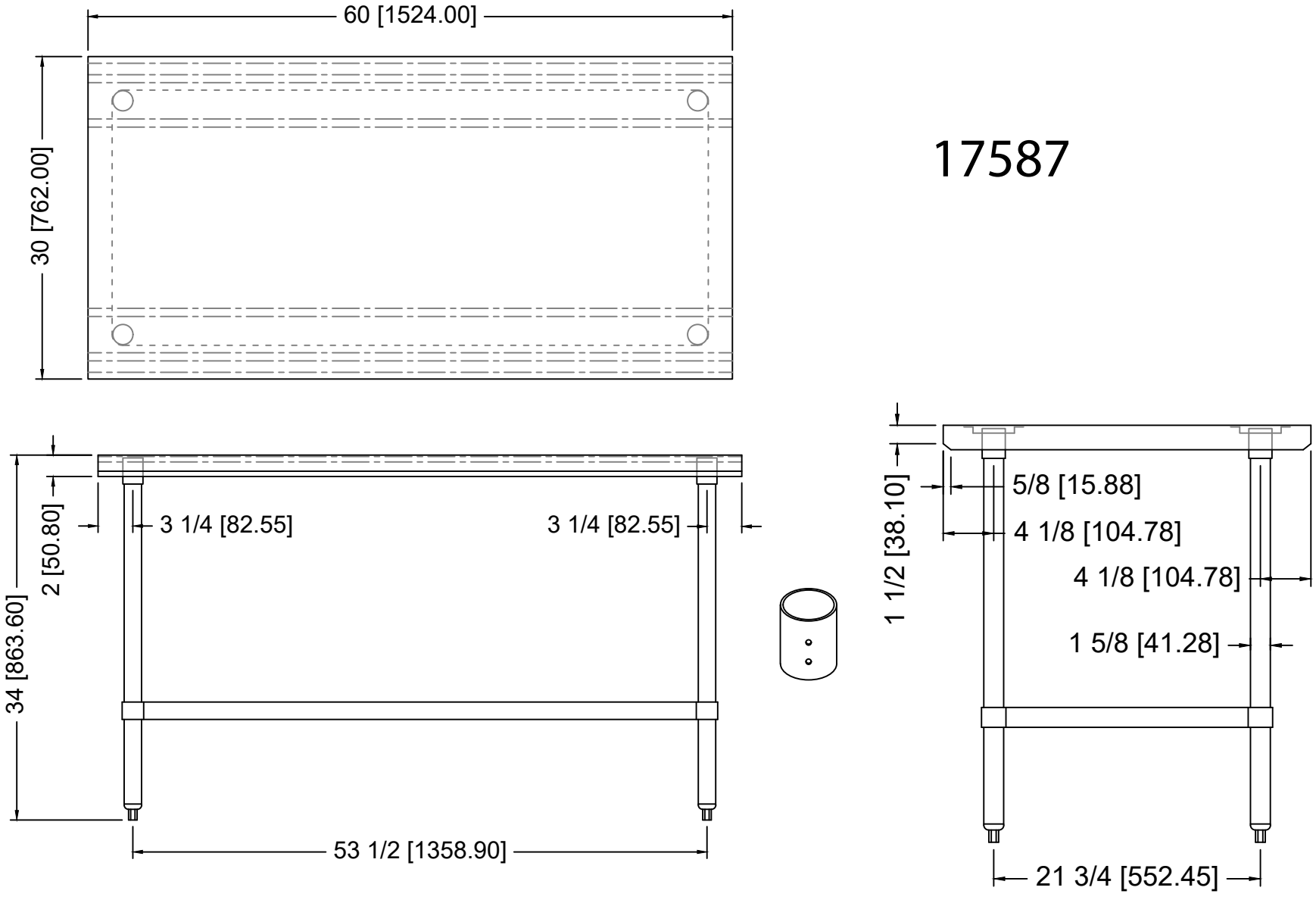
60 [1524.00]
30 [762.00]
2 [50.80]
34 [863.60]
3 1/4 [82.55]
3 1/4 [82.55]
53 1/2 [1358.90]
1 1/2 [38.10]
5/8 [15.88]
4 1/8 [104.78]
4 1/8 [104.78]
1 5/8 [41.28]
21 3/4 [552.45]