17586

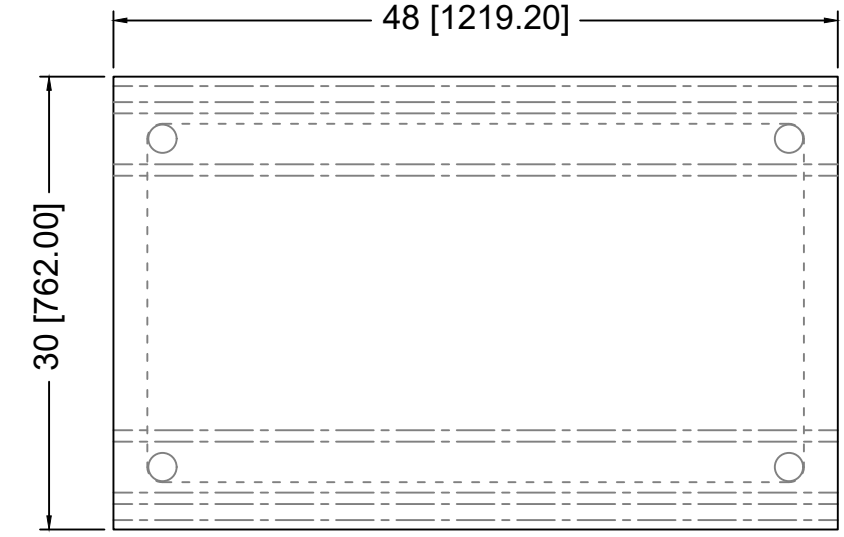
48 [1219.20]
30 [762.00]

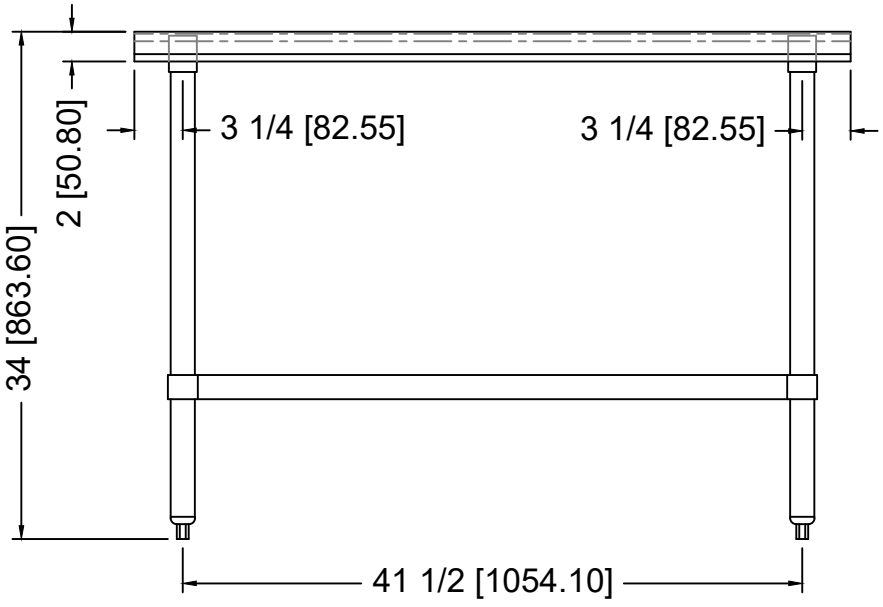
2 [50.80]
34 [863.60]
3 1/4 [82.55]
3 1/4 [82.55]
41 1/2 [1054.10]

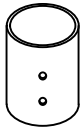

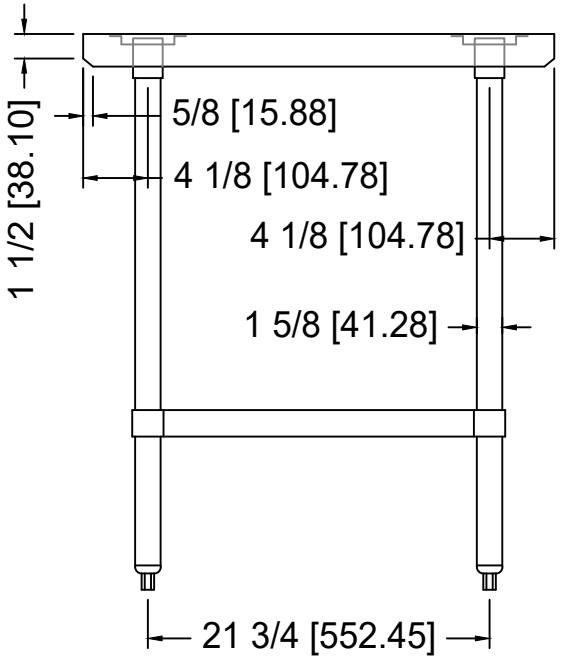
1 1/2 [38.10]
5/8 [15.88]
4 1/8 [104.78]
4 1/8 [104.78]
1 5/8 [41.28]
21 3/4 [552.45]