Parts Breakdown

Model BB-CN-0020-GH 50062

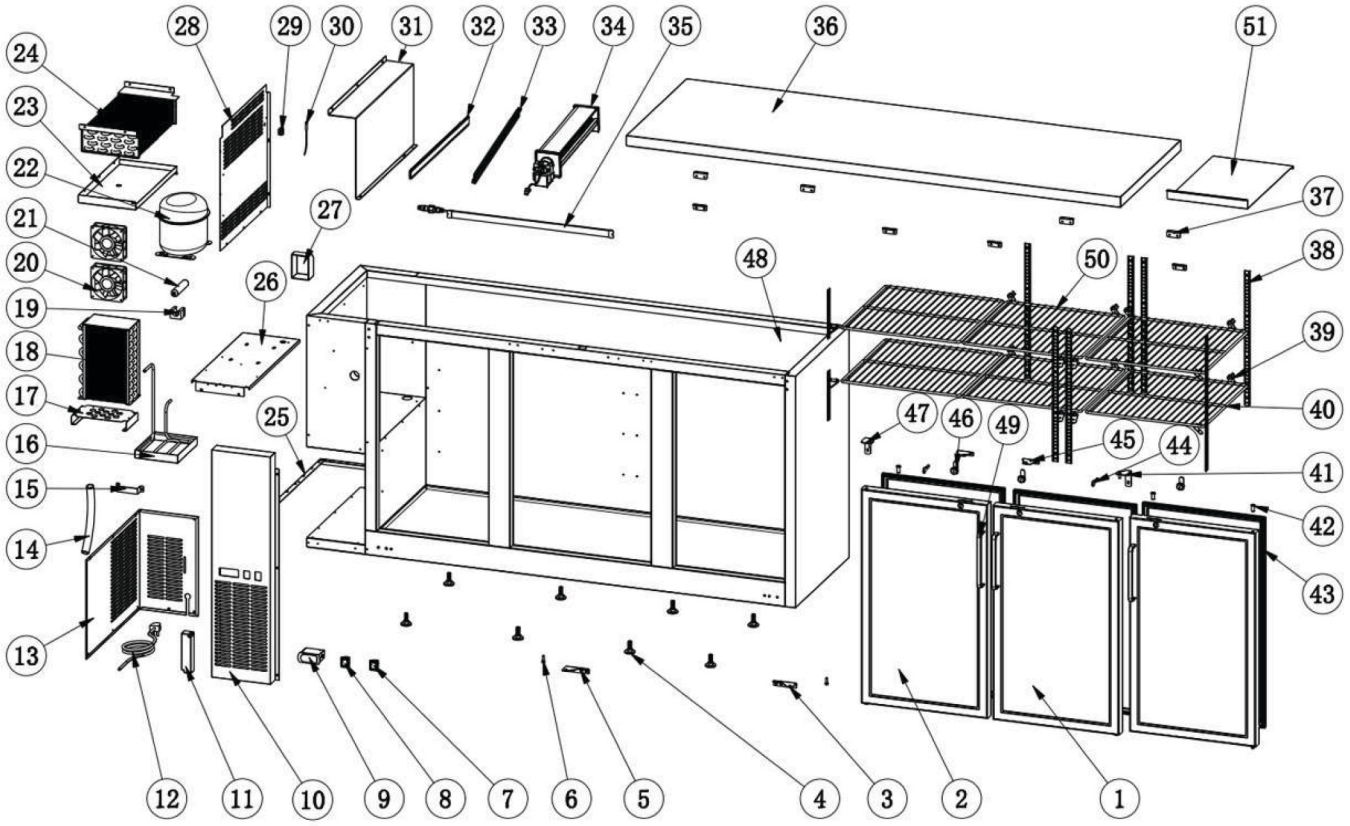

Parts Breakdown

Model BB-CN-0020-GH 50062

Item No.	Description	Position
47662	Right Glass Door for 50062	1
AA463	Left Glass Door for 50062	2
AA360	Hinge T for 50062	3
AA185	Leveling Feet for 50062	4
AA360	Hinge T for 50062	5
AA361	Bottom Hinge Axis for 50062	6
AA124	Power Switch for 50062	7
AA362	LED Light Switch for 50062	8
27185	Carel Temperature Controller PYGX1Z0501 for 50062	9
AF776	Control Panel for 50062	10
AM179	LED Power Supply for 50062	11
AA365	Power Cord for 50062	12
AF777	Back Grill for 50062	13
AA216	Drain Tube for 50062	14
AB974	Handle for Installation Board for 50062	15
AF087	Outer Drain Pan for 50062	16
AF778	Condenser Installation Board for 50062	17

Item No.	Description	Position
AP021	Condenser for 50062	18
AB595	Filter Fixer for 50062	19
AA128	Condenser Fan Motor for 50062	20
AA371	Filter for 50062	21
AF088	Compressor for 50062	22
AI396	Inner Drain Pan for 50062	23
37686	Evaporator for 50062	24
AF780	Fixed Mounts for Back Grill for 50062	25
AF781	Compressor Installation Board for 50062	26
AF823	Evaporator Cover for 50062	28
AA378	Temperature Probe Fixer for 50062	29
AA121	Temperature Sensor of Cabinet Inside for 50062	30
AI398	Inst Sheet for Evaporator for 50062	31
AP022	Sponge for 50062	32
AL936	Evaporator Fan Cover for 50062	33
AM180	Evaporator Fan Motor for 50062	34
68296	LED Light for 50062	35

Item No.	Description	Position
AF824	Top Board for 50062	36
AF764	Top Board Fixer for 50062	37
AF176	K Strip-4 Holes for 50062	38
26884	K Clip for 50062	39
37739	Shelf for 50062	40
AA436	Upper Right Hinge for 50062	41
AA388	Axis Cover for 50062	42
AA480	Gasket for 50062	43
AA390	Key for 50062	44
AF761	Lock Plate for 50062	45
AA392	Lock for 50062	46
AF786	Upper Light Hinge for 50062	47
AA395	Glass Door Handle for 50062	49
37740	Middle Shelf for 50062	50
AF805	Air Deflector for 50062	51