Parts Breakdown

Model RS-CN-0468 47277

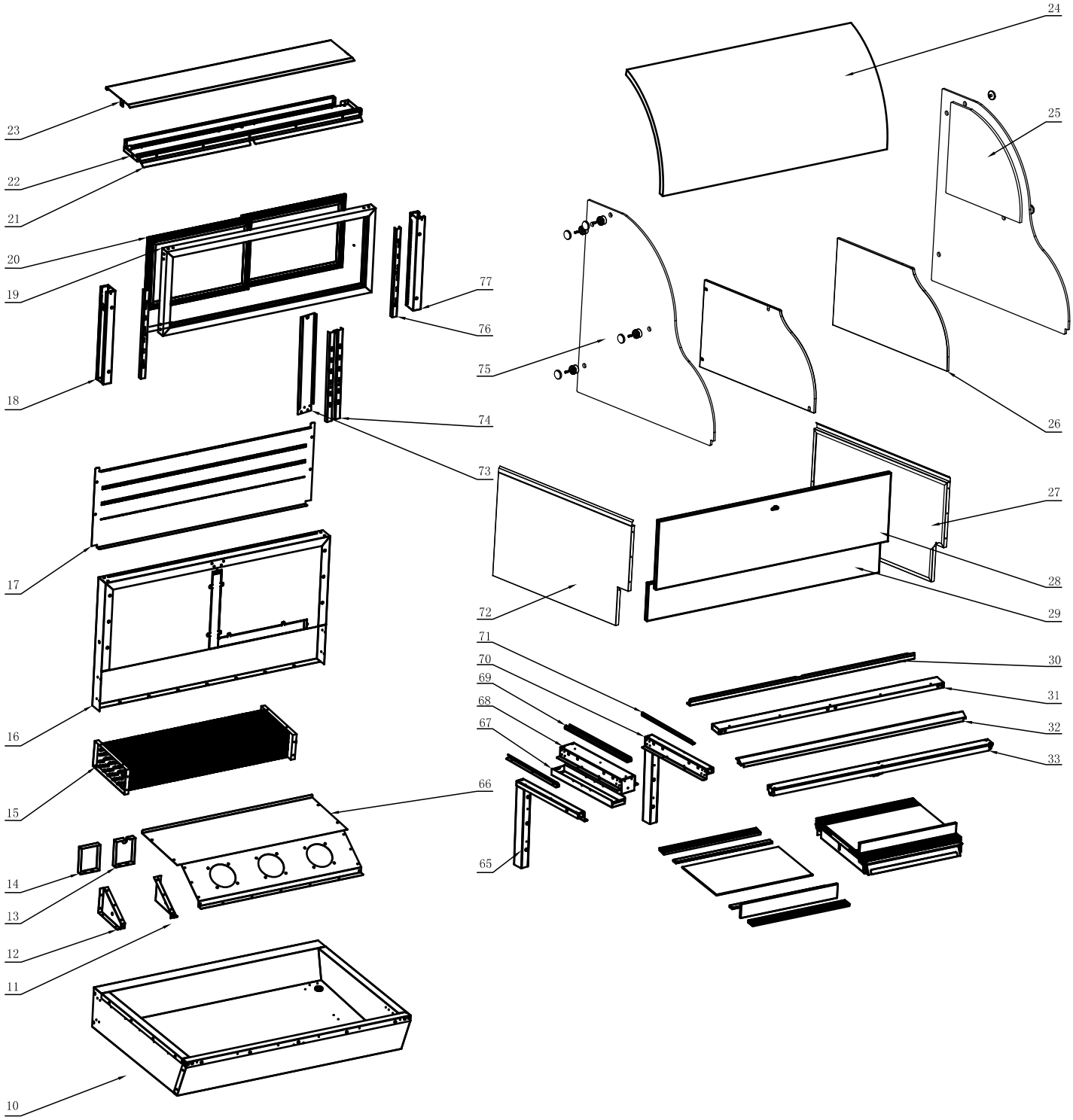

Parts Breakdown

Model RS-CN-0468 47277

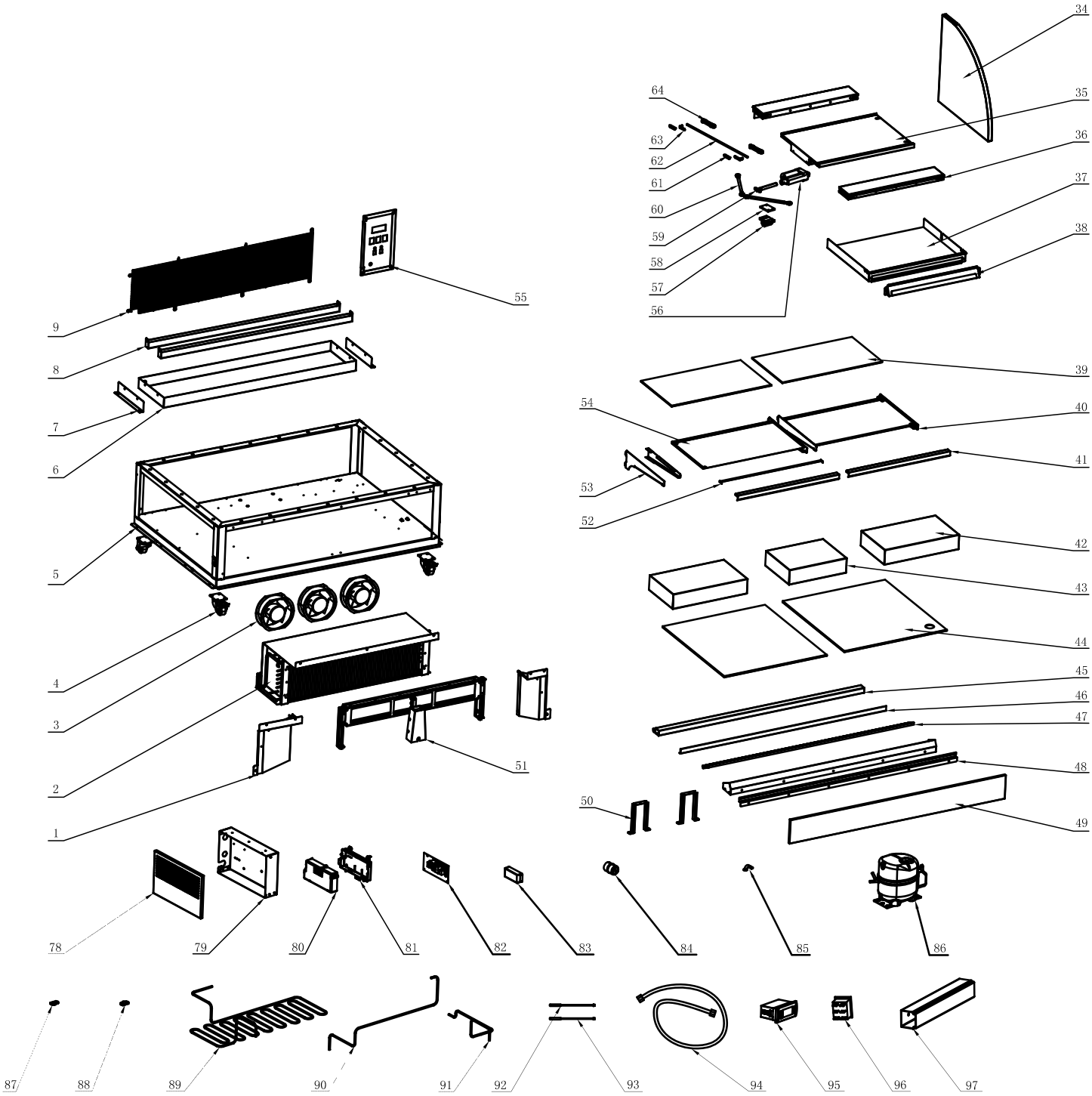

Parts Breakdown

Model RS-CN-0468 47277

Item No.	Description	Position
AI267	Condenser Air Guide Cover Left for 47277	1
AI268	Condenser for 47277	2
68396	Motor for 47277	3
AI054	Caster with Brake for 47277	4
AI269	Bottom Frame (Welded Assembly) for 47277	5
AI270	Welding Assembly of High Pressure Tube for 47277	6
AI051	Fixing Support of High Pressure Tube for 47277	7
AI271	Pressure Board of High Pressure Tube for 47277	8
AI272	Back Net for 47277	9
AI273	Base Foam of Evaporator for 47277	10
AI059	Right Board of Evaporator Motor Cover for 47277	11
AI058	Left Board of Evaporator Motor Cover for 47277	12
AI274	Evaporator Right Block for 47277	13
AI275	Evaporator Left Block for 47277	14
AI276	Evaporator for 47277	15
AI277	Back Foam for 47277	16
AI278	Ventilation Board for 47277	17
AI115	Left Door Frame Assembly for 47277	18
AI279	Top Glass Strip for 47277	21
AI280	Door Frame Top for 47277	22
AI281	Top Ceiling Board for 47277	23
AI282	Curved Glass for 47277	24
AI120	Right Side Glass for 47277	25
AI119	Right Side Interior Panel for 47277	26
AI283	Right Frame Assembly for 47277	27
AI284	Front Top Frame for 47277	28
AI285	Front Bottom Frame for 47277	29
AI286	Front Glass Strip for 47277	30

Item No.	Description	Position
AI287	Front Fixing Support Assembly for 47277	31
AI288	Front Shield Board of Top Shelf for 47277	32
66104	Night Curtain for 47277	33
AI114	Middle Partition Left for 47277	34
AI289	Tray Assembly Left for 47277	35
AI290	Isolation Block Assembly for 47277	36
AI291	Isolation Board Left for 47277	37
AI292	Air Guide Cover Assembly for 47277	38
AI293	Shelf Glass - Heating Film for 47277	39
AI077	Connection Panel of Right Shelf for 47277	40
AI294	Left and Right Front Board of Shelf for 47277	41
AI092	Block Big for 47277	42
AI295	Block Small for 47277	43
AI296	Flat Glass for 47277	44
AI297	Wind Screen for Air In for 47277	45
AI298	Cross Shield Board for Air In for 47277	46
AI299	Bottom Ventilation Shield Board for 47277	47
AI300	Fixing Panel of Front Glass Deflector for 47277	48
AI301	Front Wind Screen for 47277	49
AI099	Reinforcement Board for Air In for 47277	50
AI302	Fixing Board for Shelf LED for 47277	52
AI113	Left Shelf Connection Panel for 47277	53
AI303	Left Panel of Shelf for 47277	54
AI112	Switch Panel for 47277	55
AI105	Electrical Pushing Lever for 47277	56
AI101	Fixing Seat for 47277	57
AI102	Seat Pad for 47277	58
AI107	Fixing Panel for Air In for 47277	61

Item No.	Description	Position
AI304	Pulley Rail Pin for 47277	62
AI106	Positioning Block for Pulley Rail for 47277	63
AI305	Left Fixing Support Assembly for 47277	65
AI306	Evaporator Motor Cover for 47277	66
AI109	Middle Fixing Support Bottom for 47277	67
AI110	Middle Fixing Support for 47277	68
AI111	Middle Glass Strip for 47277	69
AI085	Right Fixing Support Assembly for 47277	70
AI084	Strip of Top Side Glass for 47277	71
AI064	Left Frame Assembly for 47277	72
AI117	Middle Pole of Shelf Back for 47277	73
AI116	Middle Pole of Shelf Front for 47277	74
AI065	Left Side Glass for 47277	75
AI074	Right Pole for Shelf for 47277	76
AI073	Door Frame Right Assembly for 47277	77
AI121	Wiring Box Cover for 47277	78
AI122	Wiring Box for 47277	79
60594	Cover of Circuit Board Box for 47277	80
61167	Circuit Board Box for 47277	81
AI123	Main Board for 47277	82
67652	LED Transformer for 47277	83
61224	Dry Filter for 47277	84
60669	Pressing Plate of Dry Filter for 47277	85
AI124	Compressor for 47277	86
61246	Wire Clip Holder for 47277	87
66095	Wire Clip Cover for 47277	88
AI307	High Pressure Evaporator Tube for 47277	89
AI126	Connection Pipe for 47277	90

Parts Breakdown

Model RS-CN-0468 47277

Item No.	Description	Position
AI308	Connection Pipe for 47277	91
68353	Temperature Sensor for 47277	92
67674	Compressor Protect Probe for 47277	93

Item No.	Description	Position
60668	Drain Pipe for 47277	94
67648	Temperature Display for 47277	95
60119	Switch for 47277	96

Item No.	Description	Position
60590	PVC Trucking for 47277	97