Refrigerated Showcase

Model RS-CN-0390-L

Item 44439

Instruction Manual

STOP

DO NOT RETURN THIS PRODUCT TO THE STORE

For questions or assistance with this product call OMCAN Toll Free:
1 800 465 0234
Customer Service
or
visit the Support section of
www.omcan.com

Revised - 06/20/2025

Intertek Intertek

Toll Free: 1-800-465-0234
Fax: 905-607-0234
Email: service@omcan.com
www.omcan.com

MADE IN CHINA

Table of Contents

Model RS-CN-0390-L

Section	Page
Disclaimer	3
General Information	4 - 5
Safety and Warranty	5 - 7
Technical Specifications	7
Operation	8
Maintenance	8 - 9
Troubleshooting	9 - 10
Parts Breakdown	11 - 12
Electrical Schematics	13
Notes	14
Warranty Registration	15

Disclaimer

OMCAN IS NOT RESPONSIBLE FOR DIMINISHED COOLING OR ANY DAMAGES DUE TO WATER LEAKS. WARRANTY FOR WATER LEAKS IS VOID IF THE AMBIENT ROOM TEMPERATURE EXCEEDS 75°F AND 55% RELATIVE HUMIDITY, AND THE APPLIANCE DRAIN IS NOT CONNECTED DIRECTLY TO A FLOOR DRAIN.

OMCAN N'EST PAS RESPONSABLE DE LA DIMINUTION DU REFROIDISSEMENT OU DE TOUT DOMMAGE DÛ À DES FUITES D'EAU. LA GARANTIE CONTRE LES FUITES D'EAU EST ANNULÉE SI LA TEMPÉRATURE AMBIANTE DE LA PIÈCE DÉPASSE 75 °F ET 55 % D'HUMIDITÉ RELATIVE ET QUE LE DRAIN DE L'APPAREIL N'EST PAS CONNECTÉ DIRECTEMENT À UN SIPHON DE SOL.

OMCAN NO ES RESPONSABLE DE LA DISMINUCIÓN DEL ENFRIAMIENTO NI DE NINGÚN DAÑO DEBIDO A FUGAS DE AGUA. LA GARANTÍA POR FUGAS DE AGUA QUEDA ANULADA SI LA TEMPERATURA AMBIENTE EXCEDE LOS 75 °F Y EL 55 % DE HUMEDAD RELATIVA, Y EL DRENAJE DEL ELECTRODOMÉSTICO NO ESTÁ CONECTADO DIRECTAMENTE A UN DRENAJE DEL PISO.

General Information

Omcan Manufacturing and Distributing Company Inc., Food Machinery of America, Inc. dba Omcan and Omcan Inc. are not responsible for any harm or injury caused due to any person's improper or negligent use of this equipment. The product shall only be operated by someone over the age of 18, of sound mind, and not under the influence of any drugs or alcohol, who has been trained in the correct operation of this machine, and is wearing authorized, proper safety clothing. Any modification to the machine voids any warranty, and may cause harm to individuals using the machine or in the vicinity of the machine while in operation.

CHECK PACKAGE UPON ARRIVAL

Upon receipt of an Omcan shipment please inspect for external damage. If no damage is evident on the external packaging, open carton to ensure all ordered items are within the box, and there is no concealed damage to the machine. If the package has suffered rough handling, bumps or damage (visible or concealed), please note it on the bill of lading before accepting the delivery and contact Omcan within 24 hours, so we may initiate a claim with the carrier. A detailed report on the extent of the damage caused to the machine must be filled out within three days, from the delivery date shown in the shipping documents. Omcan has no recourse for damaged products that were shipped collect or third party.

Before operating any equipment, always read and familiarize yourself with all operation and safety instructions.

Omcan would like to thank you for purchasing this machine. It's of the utmost importance to save these instructions for future reference. Also save the original box and packaging for shipping the equipment if servicing or returning of the machine is required.

Omcan Fabrication et distribution Companie Limité et Food Machinery d'Amerique, dba Omcan et Omcan Inc. ne sont pas responsables de tout dommage ou blessure causé du fait que toute personne ait utilisé cet équipement de façon irrégulière. Le produit ne doit être exploité que par quelqu'un de plus de 18 ans, saine d'esprit, et pas sous l'influence d'une drogue ou d'acohol, qui a été formé pour utiliser cette machine correctement, et est vêtu de vêtements de sécurité approprié. Toute modification de la machine annule toute garantie, et peut causer un préjudice à des personnes utilisant la machine ou des personnes à proximité de la machine pendant son fonctionnement.

VÉRIFIEZ LE COLIS DÈS RÉCEPTION

Dès réception d'une expédition d'Omcan veuillez inspecter pour dommages externes. Si aucun dommage n'est visible sur l'emballage externe, ouvrez le carton afin de s'assurer que tous les éléments commandés sont dans la boîte, et il n'y a aucun dommage dissimulé à la machine. Si le colis n'a subi aucune mauvaises manipulations, de bosses ou de dommages (visible ou cachée), notez-le sur le bond de livraison avant d'accepter la livraison et contactez Omcan dans les 24 heures qui suivent, pour que nous puissions engager une réclamation auprès du transporteur. Un rapport détaillé sur l'étendue des dommages causés à la machine doit être rempli dans un délai de trois jours, à compter de la date de livraison indiquée dans les documents d'expédition. Omcan n'a aucun droit de recours pour les produits endommagés qui ont été expédiées ou cueilli par un tiers transporteur.

Avant d'utiliser n'importe quel équipement, toujours lire et vous familiariser avec toutes les opérations et les

General Information

consignes de sécurité.

Omcan voudrais vous remercier d'avoir choisi cette machine. Il est primordial de conserver ces instructions pour une référence ultérieure. Également conservez la boîte originale et l'emballage pour l'expédition de l'équipement si l'entretien ou le retour de la machine est nécessaire.

Omcan Empresa De Fabricacion Y Distribucion Inc. Y Maquinaria De Alimentos De America, Inc. dba Omcan y Omcan Inc. no son responsables de ningun daño o perjuicío causado por cualquier persona inadecuada o el uso descuidado de este equipo. El producto solo podra ser operado por una persona mayor de 18 años, en su sano juicio y no bajo alguna influencia de droga o alcohol, y que este ha sido entrenado en el correcto funcionamiento de esta máquina, y ésta usando ropa apropiada y autorizada. Cualquier modificación a la máquina anúla la garantía y puede causar daños a las personas usando la máquina mientras esta en el funcionamiento.

REVISE EL PAQUETE A SU LLEGADA

Tras la recepcion de un envio Omcan favor inspeccionar daños externos. Si no hay daños evidentes en el empaque exterior, Habra el carton para asegurararse que todos los articulos solicitados ésten dentro de la caja y no encuentre daños ocultos en la máquina. Si el paquete ha sufrido un manejo de poco cuidado, golpes o daños (visible o oculto) por favor anote en la factura antes de aceptar la entrega y contacte Omcan dentro de las 24 horas, de modo que podamos iniciar una reclamación con la compañia. Un informe detallado sobre los daños causados a la máquina debe ser llenado en el plazo de tres días, desde la fecha de entrega que se muestra en los documentos de envío. Omcan no tiene ningun recurso por productos dañados que se enviaron a recoger por terceros.

Antes de utilizar cualquier equipo, siempre lea y familiarizarse con todas las instrucciones de funcionamiento y seguridad.

Omcan le gustaría darle las gracias por la compra de esta máquina. Es de la mayor importancia para salvar estas instrucciones para futuras consultas. Además, guarda la caja original y el embalaje para el envío del equipo si servicio técnico o devolución de la máquina que se requiere.

Safety and Warranty

HANDLING AND INSTALLATION

Handle with care Unplug from the wall socket before moving. Never tilt the refrigerator over 45 degrees during handling.	**Storage** Always store the refrigerator in a dry place.

Safety and Warranty

Sufficient space To allow for proper air circulation and increased refrigeration capabilities, the refrigerator must have at least 4”/10cm of space between wall/ceiling and the machine.	**Proper ventilation** Always place the refrigerator in an area with good ventilation. For first time use, set in location and wait at least 2 hours before plugging into wall socket.
Away from heat source Never place the refrigerator near any type of heat source or in direct sunlight, as it reduces refrigeration capabilities.	**No heavy load** Never put heavy items on top of the refrigerator.
No altercations/tampering Never tamper with or make changes to the refrigerator. Changes and add-ons should not be installed to the inside or outside of the refrigerator.	**Stable location** Unpack and place the refrigerator on flat, solid ground.

PREPARATION AND POWER SUPPLY

Exclusive power outlet Power supply should be 110V, single phase AC with exclusive single phase three pin outlet (125V/15A). The power outlet must be in close proximity to the ground.	**No shared power outlets** Refrigerator cable should never share the power outlet with any other appliance, as cable will overheat and may result in a fire.
Protect cables Extra caution should be used when handling cables, as broken or damaged cables can cause sparking and may result in a fire.	**No water flushing** Never flush the refrigerator surface. This can cause leakage, which may result in electrical damage or fire.
Never store flammables and explosives No explosives or flammables should be stored in, or in proximity to, the refrigerator, such as gasoline, alcohol, and adhesives.	**No spray** Never spray flammables such as paint or coating near the refrigerator. This may cause fire or malfunction.
After power outage After a power outage or the unplugging of the refrigerator, wait at least 5 minutes before plugging it back in.	**No medicine** Medicine should not be stored inside of the refrigerator.

SUITABLE FOR HIGH TRAFFIC AREAS WHERE NOISE LEVELS ARE NOT A CONCERN.

OMCAN IS NOT RESPONSIBLE FOR DIMINISHED COOLING OR ANY DAMAGES DUE TO WATER LEAKS. WARRANTY FOR WATER LEAKS IS VOID IF THE AMBIENT ROOM TEMPERATURE EXCEEDS 75°F AND 55% RELATIVE HUMIDITY, AND THE APPLIANCE DRAIN IS NOT CONNECTED DIRECTLY TO A FLOOR DRAIN.

RESIDENTIAL USERS: vendor assumes no liability for parts or labor coverage for component failure or other damages resulting from installation in non-commercial or residential applications. The right is reserved to deny shipment for residential usage; if this occurs, you will be notified as soon as possible.

Safety and Warranty

1 YEAR PARTS AND LABOUR WARRANTY

Within the warranty period, contact Omcan Inc. at 1-800-465-0234 to schedule an Omcan authorized service technician to repair the equipment locally.

Unauthorized maintenance will void the warranty. Warranty covers electrical and part failures not improper use.

Please see https://omcan.com/disclaimer for complete info.

WARNING:

The packaging components are classified as normal solid urban waste and can therefore be disposed of without difficulty.

In any case, for suitable recycling, we suggest disposing of the products separately (differentiated waste) according to the current norms.

DO NOT DISCARD ANY PACKAGING MATERIALS IN THE ENVIRONMENT!

Technical Specifications

Model	**RS-CN-0390-L**
Item Number	**44439**
Capacity	390 L / 13.8 cu.ft.
Compressor Power	0.75 HP
Rated Current	14.5 A
Refrigerant	R290
Temperature Range	2 - 10°C / 35.6 - 50°F
Max Ambient Temp Rating	24°C / 75°F
Electrical Heating Element	450 W
Lamp Power	5.6 W
Number of Shelves	4
Electrical	110-120V / 60Hz / 1
Net Dimensions	36.1” x 31.2” x 57.4” / 918 x 792 x 1459mm
Net Weight	271.2 lbs. / 123 kgs.
Packaging Dimensions	39” x 34.6” x 63” / 990 x 880 x 1600mm
Packaging Weight	337.3 lbs. / 153 kgs.

Operation

BEFORE USE

- Plug refrigerator into the 110V exclusive socket.
- After the refrigerator is running, confirm that air suction/filtration is in working order and that it is sufficiently cold. After checking to make sure the refrigerator is working properly, it may be used.

DIGITAL TEMPERATURE CONTROLLER

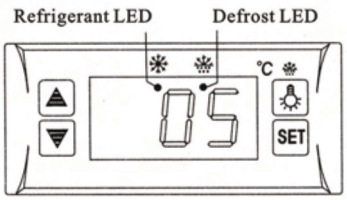

FEATURES OF FUNCTION

- Small, integrated digital controller, which is applicable to the compressor of 1 Hp. Located behind the front grill.
- Main functions are: Temperature Display/Temperature Control/Manual-Automatic /Light Control/Value Storing/Self-Testing/Parameter Locking.

FRONT PANEL OPERATION

1. Set temperature: Press SET button; set temperature will be displayed. Press ▲ or ▼ button to modify and store the displayed value. Press SET button to exit the adjustment and display the cold-room temperature.
2. If no button is pressed within 10 seconds, the cold-room temperature will be displayed.
3. Lighting: Press button to activate light in refrigerator; press again to turn off. Manual start/stop defrost: Press button and hold for 6 seconds to either defrost or to stop defrost.
4. Refrigeration LED: During refrigeration, the LED is on. When the cold room temperature is constant, the LED is off. During delay start, the LED flashes.
5. Defrost LED: During defrosting, the LED is on. When it stops defrosting, the LED is off. During the delay of defrost, the LED flashed.

Maintenance

CABINET CLEANING

The product should be cleaned once a week with the power supply disconnected. When cleaning please use a mild cleansing agent. Only use a damp cloth.

Maintenance

CLEANING THE FILTER

When message “EE4” appears on the display, please clean the filter immediately. If the error message still appears after cleaning the filter, please contact Omcan.

INSTRUCTIONS FOR CLEANING THE FILTER

1. Remove the four screws from the top of the front grill.
2. Pull out the front grill.
3. Take out the filter.

CHECK FOR LEAKS

Observe all connectors and welding joints for oil stains. This indicates that there is a leak, please call Omcan if you notice any oil stains.

ALWAYS OBSERVE THE OPERATION OF THE UNIT, IN THE EVENT OF ANY ABNORMAL SOUNDS OR SMELLS, OR IF THE UNIT BEGINS TO SMOKE, DISCONNECT THE UNIT FROM THE POWER SUPPLY AND CALL OMCAN.

Troubleshooting

Trouble	Causes	Solutions
Strange noise under the bottom shelf.	Fan blade broken.	Power off and fix the blade.
Non-refrigerating in spite of normal operation.	Unit off.	Power on.
	Melting process.	Stop melting.
	Refrigerant leaking.	Patch the leak and refill refrigerant.
	Unit failure.	Call Omcan.
Weak air from air curtain, and higher cabinet temperature.	Evaporator blocked by frost.	Increase melting frequency.
	Inside fan damaged.	Replace the fan.
	Too low point of temperature controller.	Adjust the set point.
	Vent blocked by storage.	Remove the storage.
Normal air curtain, but higher cabinet temperature.	Insufficient refrigerant.	Refill the refrigerant.
	Too high set point of temperature controllers.	Adjust the set point for the temperature controller.
	The wind curtain disturbed by strong air flow.	Removing the disturbing factors.
	Ambient temperature or humidity beyond standards.	Improve the conditions.

Troubleshooting

Trouble	Causes	Solutions
Melting water overflows.	Heating pipe for melting water damaged.	Replace the heating pipe.
	Water level controller failure.	Replace the water level controller.
	Ambient temperature or humidity beyond standards.	Improve the conditions.
Normal air curtain, but periodical fluctuation of cabinet temperature.	Condenser contaminated.	Clean the condenser.
	Poor venting of the unit.	Improve the venting conditions.
	Heat protection of compressor failure.	Replace the heat protection.
	Capillary is blocked by ice.	Replace the drying filter.
	Temperature controller failure.	Replace the temperature controller.

NOTE

Following occurrences are not problems:

- The murmur of water is heard when the refrigerator is working. It is a normal occurrence as the coolant is circulating in the system.
- When the weather is damp, condensation might be found on the outside of the refrigerator. It is caused by high humidity. Simply use cloth to wipe it off.

Parts Breakdown

Model RS-CN-0390-L 44439

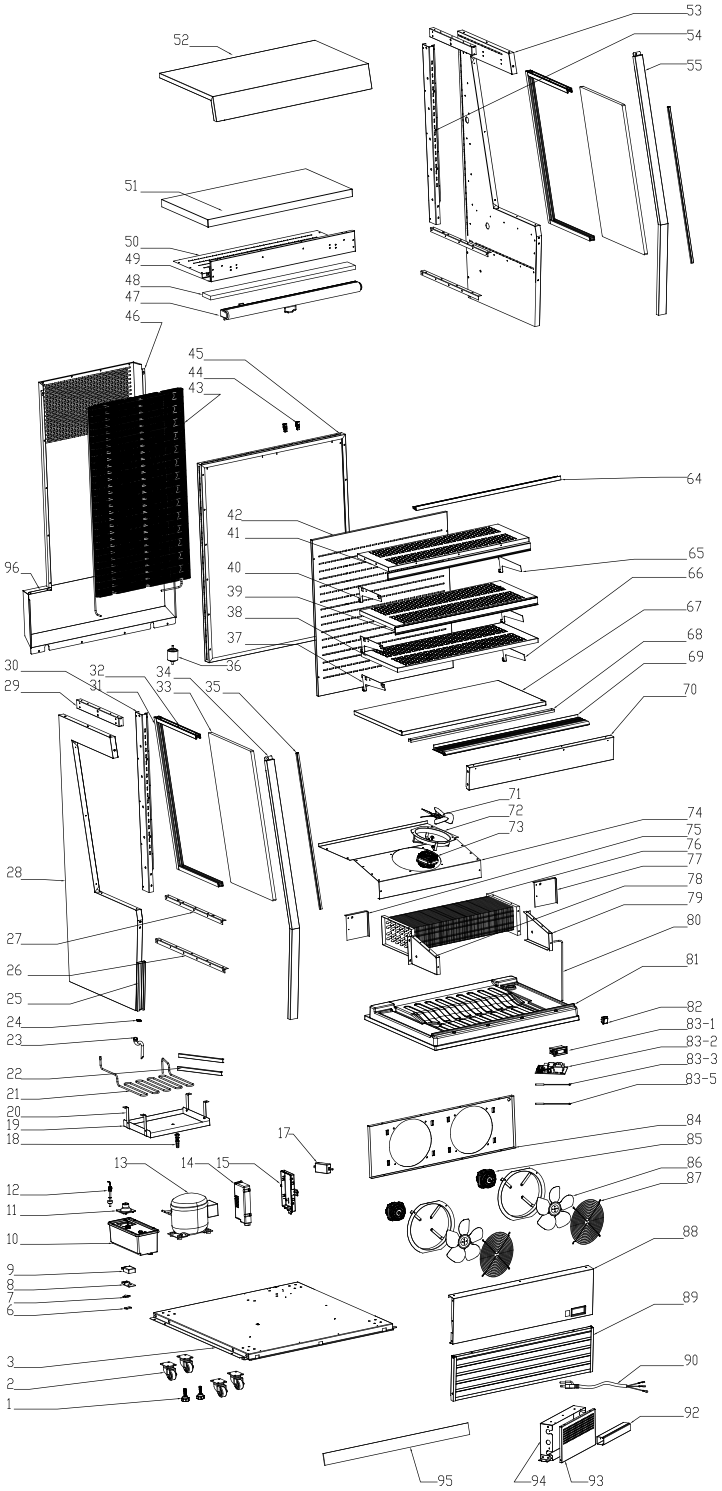

Parts Breakdown

Model RS-CN-0390-L 44439

Item No.	Description	Position
60672	Feet for 44439	1
60561	Rear Wheels for 44439	2
68404	Base Board for 44439	3
61246	Wire Clip Holder for 44439	6
61245	Wire Clamp Cover for 44439	7
61244	Terminal Box for 44439	8
79359	Cover of Junction Box for 44439	9
60587	Water Receiver for 44439	10
79304	Pipe for Evaporated Water for 44439	11
60589	Water Level Detector for 44439	12
67641	Compressor for 44439	13
60594	Cover of Circuit Board Box for 44439	14
61167	Circuit Board Box for 44439	15
60675	LED Transformer for 44439	17
61241	Water Nozzle for 44439	18
61240	Tray of Heater for 44439	19
61239	Bracket of Water Receiver for 44439	20
61238	Heater for 44439	21
61237	Platen of Heater for 44439	22
30744	Water Pipe for 44439	23
68368	Snap Ring for 44439	24
68406	Fixing Plate for Trim Strip for 44439	25
68407	Connector of Evaporator Base Panel for 44439	26
68408	Support for Upper Cover of Base for 44439	27
68409	Foam of Left Side Board for 44439	28
68410	Support for Ceiling for 44439	29
68411	Left Support Pillar of Shelf for 44439	30
68412	Back Strip for Side Glass for 44439	31
68413	Top/Bottom Strip for Side Glass for 44439	32

Item No.	Description	Position
68414	Side Glass for 44439	33
68415	Outer Left Trim Strip for 44439	34
68416	LED Strip for 44439	35
61224	Dry Filter for 44439	36
61195	Bottom Left Shelf Bracket for 44439	37
68417	Bottom Shelf for 44439	38
68418	Price Tag Holder for 44439	39
61198	Top Left Shelf Bracket for 44439	40
68419	Upper Shelf for 44439	41
68420	Ventilated Board for 44439	42
68421	Condenser for 44439	43
61222	Stands for Condenser for 44439	44
68422	Foam of Back Cover for 44439	45
68423	Condenser Cover for 44439	46
68424	Night Curtain for 44439	47
68425	Honeycomb Panel for 44439	48
68426	Board Ahead Curtain for 44439	49
68427	Ceiling Board of Cabinet for 44439	50
68428	PE for Upper Cover Plate for 44439	51
68429	Upper Cover Plate for 44439	52
68430	Foam of Right Board for 44439	53
68431	Right Support Pillar of Shelf for 44439	54
68432	Outer Right Trim Strip for 44439	55
68440	Wind Screen Strip for 44439	64
61199	Top Right Shelf Bracket for 44439	65
61196	Bottom Right Shelf Bracket for 44439	66
68441	Bottom Board of Cabinet for 44439	67
68442	Air Inlet Stand for 44439	68
68443	Air Inlet Cover for 44439	69

Item No.	Description	Position
68444	Front Board for Evaporator for 44439	70
66351	Fan Blade for 44439	71
60932	Fan Guard for 44439	72
68337	Motor for 44439	73
61182	Evaporator Cover for 44439	74
68445	Left Wind Screen of Evaporator for 44439	75
61181	Evaporator for 44439	76
68446	Right Wind Screen of Evaporator for 44439	77
71521	Left Board of Evaporator Cover for 44439	78
61180	Right Board of Evaporator Cover for 44439	79
68452	Connection Pipe for 44439	80
68453	Base Foam of Evaporator for 44439	81
AR485	Switch (Higher Amp) for 44439	82
67648	Temperature Display for 44439	83-1
67649	Main Circuit Board for 44439	83-2
60666	Temperature Probe for 44439	83-3
68333	Over-Heating Sensor for 44439	83-5
68447	Holder for Condenser Motor for 44439	84
68341	Motor for 44439	85
60933	Fan Blade for 44439	86
61170	Flat Net Cover for 44439	87
68448	Front Base Panel for 44439	88
68449	Window Shade Components for 44439	89
79290	Power Cord for 44439	90
60590	PVC Trucking for 44439	92
60592	Cover of Terminal Box for 44439	93
60591	Terminal Box for 44439	94
68450	Glass Guard for 44439	95
68451	Back Cover of Base for 44439	96

Electrical Schematics

Model RS-CN-0390-L 44439

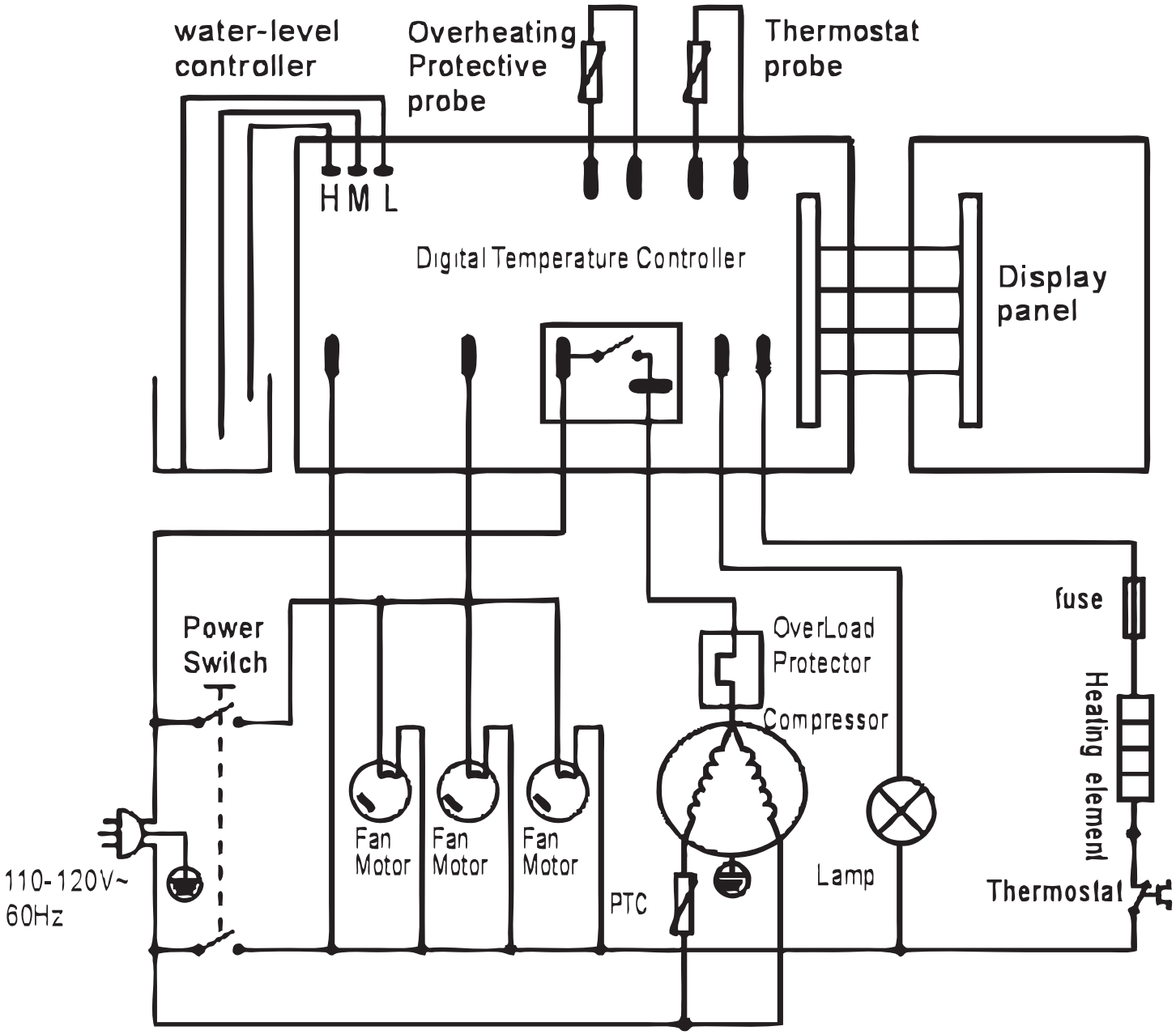

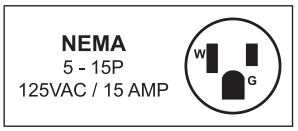

Notes

Warranty Registration

Thank you for purchasing an Omcan product. To register your warranty for this product, complete the information below, tear off the card at the perforation and then send to the address specified below. You can also register online by visiting:

Merci d'avoir acheté un produit Omcan. Pour enregistrer votre garantie pour ce produit, complétez les informations ci-dessous, détachez la carte au niveau de la perforation, puis l'envoyer à l'adresse spécifié ci-dessous. Vous pouvez également vous inscrire en ligne en visitant:

Gracias por comprar un producto Omcan usted. Para registrar su garantía para este producto, complete la información a continuación, cortar la tarjeta en la perforación y luego enviarlo a la dirección indicada a continuación. También puede registrarse en línea en:

https://omcan.com/warranty-registration/

For mailing in Canada

Pour postale au Canada

Por correo en Canadá

OMCAN
PRODUCT WARRANTY REGISTRATION
3115 Pepper Mill Court,
Mississauga, Ontario
Canada, L5L 4X5

For mailing in the US

Pour diffusion aux États-Unis

Por correo en los EE.UU.

OMCAN
PRODUCT WARRANTY REGISTRATION
4450 Witmer Industrial Estates, Unit 4,
Niagara Falls, New York
USA, 14305

or email to: service@omcan.com

Purchaser's Information

Name: _____

Address: _____

City: _____ Province or State: _____ Postal or Zip: _____

Country: _____

Dealer from which Purchased: _____

Dealer City: _____ Dealer Province or State: _____

Invoice: _____

Company Name: _____

Telephone: _____

Email Address: _____

Type of Company:

☐ Restaurant ☐ Bakery ☐ Deli

☐ Butcher ☐ Supermarket ☐ Caterer

☐ Institution *(specify)*: _____

☐ Other *(specify)*: _____

Model Name: _____ Model Number: _____

Machine Description: _____

Date of Purchase (MM/DD/YYYY): _____

Serial Number: _____

Date of Installation (MM/DD/YYYY): _____

Would you like to extend the warranty? ☐ Yes ☐ No

Thank you for choosing Omcan | Merci d'avoir choisi Omcan | Gracias por elegir Omcan

Since 1951 Omcan has grown to become a leading distributor of equipment and supplies to the North American food service industry. Our success over these many years can be attributed to our commitment to strengthen and develop new and existing relationships with our valued customers and manufacturers. Today with partners in North America, Europe, Asia and South America, we continually work to improve and grow the company. We strive to offer customers exceptional value through our qualified local sales and service representatives who provide convenient access to over 6,500 globally sourced products.

Depuis 1951 Omcan a grandi pour devenir un des “leaders” de la distribution des équipements et matériel pour l’industrie des services alimentaires en Amérique du Nord. Notre succès au cours de ces nombreuses années peut être attribué à notre engagement à renforcer et à développer de nouvelles et existantes relations avec nos clients et les fabricants de valeur. Aujourd’hui avec des partenaires en Amérique du Nord, Europe, Asie et Amérique du Sud, nous travaillons continuellement à améliorer et développer l’entreprise. Nous nous efforçons d’offrir à nos clients une valeur exceptionnelle grâce à nos ventes locales qualifiées et des représentants de service qui offrent un accès facile à plus de 6500 produits provenant du monde entier.

Desde 1951 Omcan ha crecido hasta convertirse en un líder en la distribución de equipos y suministros de alimentos en América del Norte industria de servicios. Nuestro éxito en estos años se puede atribuir a nuestro compromiso de fortalecer y desarrollar nuevas relaciones existentes con nuestros valiosos clientes y fabricantes. Hoy con socios de América del Norte, Europa, Asia y América del Sur, que trabajan continuamente para mejorar y crecer la empresa. Nos esforzamos por ofrecer a nuestros clientes valor excepcional a través de nuestro local de ventas y representantes de los servicios que proporcionan un fácil acceso a más de 6,500 productos con origen a nivel mundial.